The best… just got better.

Introducing Knappco's new nylon wearplate LM+ latching system

Standard equipment on new LM manholes, our new LM+ nylon wearplate latching system is also available as a retrofit component. Replacing cam mechanisms is the smart way to extend the life of existing covers and to maximize your investment.

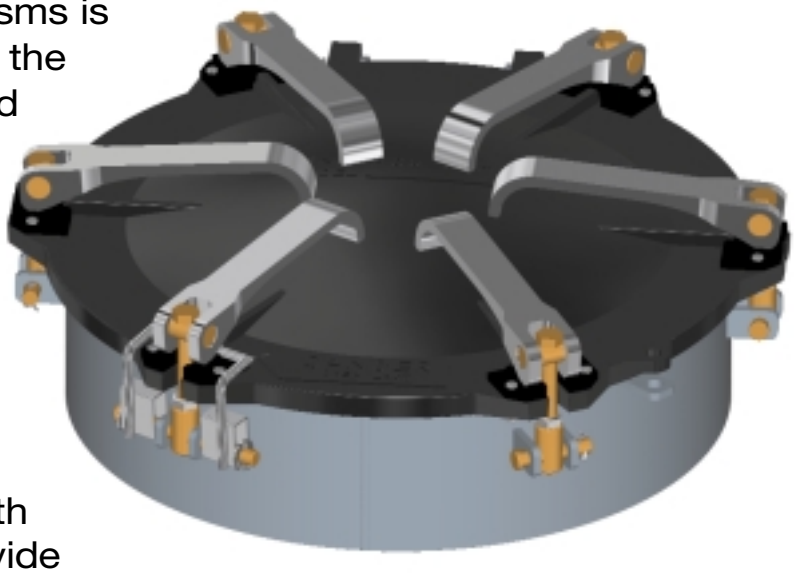

Simple to install, the new LM+ saves you time and money.

Key features include:

- Improved high strength nylon wearplates provide smooth operation and increased service life
- Easy to operate longer cam lever improves mechanical operation; provides better leverage
- Adjustable cam bolts allow for precision alignment and evenly applied lid force for a consistent, superior seal
- New barbed gasket design for new LM+ covers requires no gluing; easy to install with no mess
  (applicable with new LM+ cover design only)

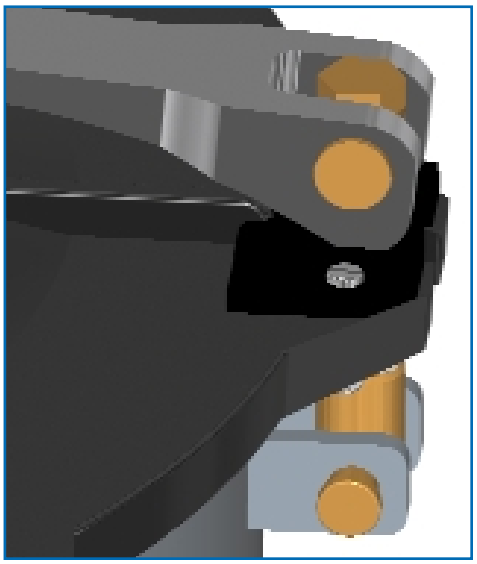

Remember… replace worn gaskets whenever you update cam components
(see back page for part numbers and ordering information)

Find out more about the LM+ — call 888.526.5657

Made In The USA

ISO 9001 Certified

Order Information : P/N LM1151

Knappco LM+ latching system

ITEM	P/N	DESCRIPTION	REQ'D
1	9373	CAM LEVER	6
2	9300	SAFETY CATCH ASSEMBLY	1
3	9310	SCR CAP	6
4	1012	CONNECTOR	6
5	3068	PIN UPPER PIVOT	6
6	4486	LOCK NUT	12
7	6832	WEAR PLATE NYLON	6
8	1016	JAM NUT (1/2"-20)	6
9	1043	WASHER (1/2" FLAT)	4
10	5084	PIN SAFETY CATCH	1
11	1045	COTTER PIN	7
12	5677	CAM PIN (NOT SHOWN)	
13	9588	SCREW (10-24 X 1 1/4")	12
14	3955	PIN PLD. CLEV.	1
15	3467	WELD RING; ALUMINUM	1
16	9093	ALUMINUM COVER	1
	9583	KIT: CAM ASSEMBLY (INCLUDES ITEMS 1-13)	1
	9209	GASKET NEOPRENE BARBED (FOR LM+ COVER)	1
	9821	GASKET BUNA-N BARBED (FOR LM+ COVER)	1
	3523	GASKET NEOPRENE (FOR TRADITIONAL LM COVER)	1

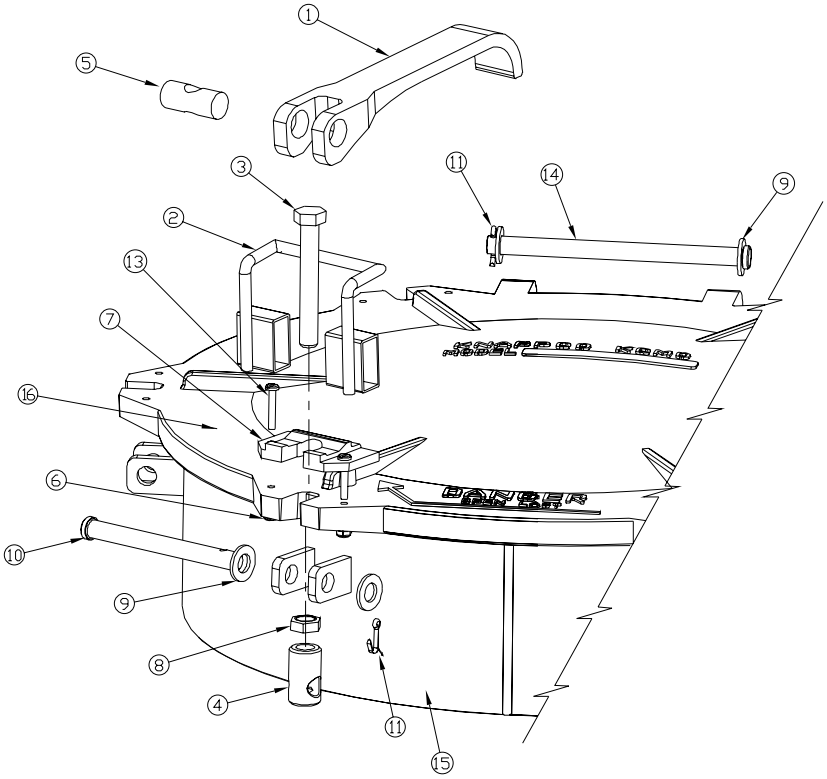

Knappco Corporation
4304 Mattox Road
Riverside, MO 64150
888-526-5657 • 816-741-6600
Fax 888-634-1433 • 816-741-1061
www.knappco.com

ISO 9001 certified

Made In The USA

©2002 Knappco • CK-01114 • FMIOS 4/02